DRAWING MADE IN THIRD ANGLE PROJECTION
THIS DRAWING IS UNPUBLISHED. RELEASED FOR PUBLICATION ,19 .
© COPYRIGHT 19 BY AMP INCORPORATED. ALL INTERNATIONAL RIGHTS RESERVED.

PROD CODE	LOC	DIST	P	F
5327	DF	F0		√

REVISIONS

ZONE	LTR	DESCRIPTION	DATE	APPD
	0	REL PER NPR 92-0447 TA	2-2-93	DG

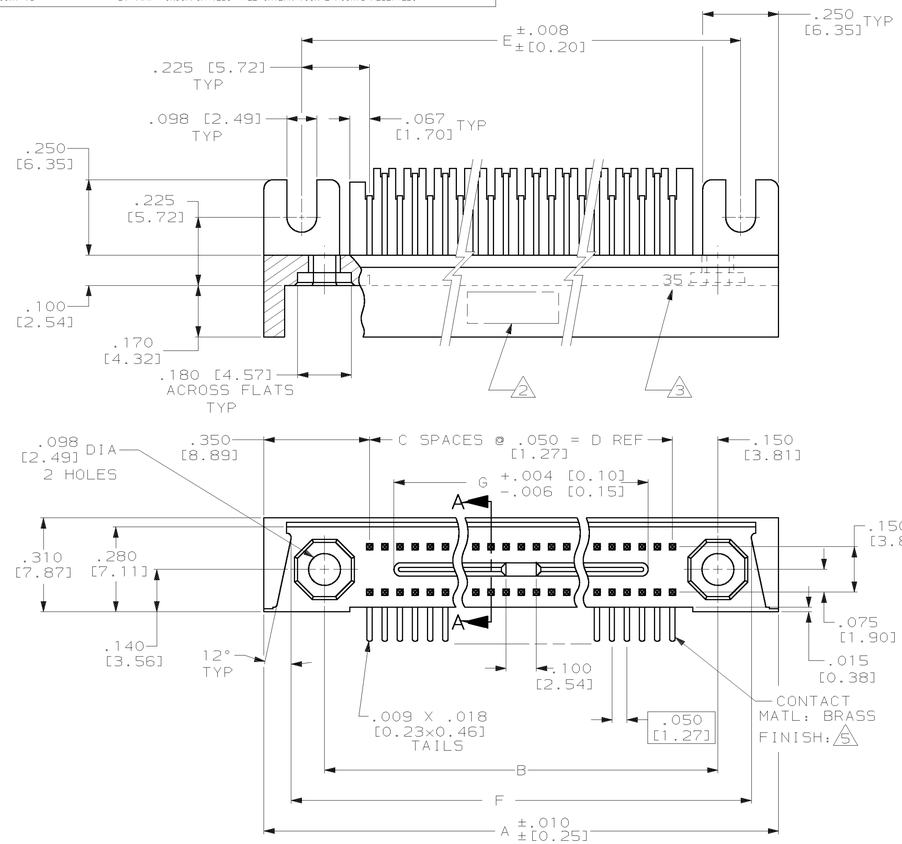

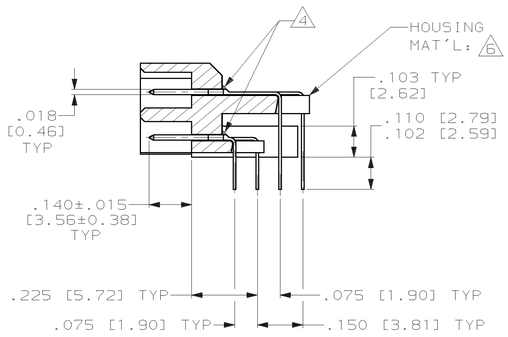

SECTION A–A

1. CONNECTOR MEETS ALL APPLICABLE REQUIREMENTS OF MIL-C-55302.
2. AMP, AMP PART NUMBER AND DATE CODE MARKED IN THIS APPROX. AREA.
3. END CAVITY IDENTIFICATION NUMBERS (PER TABLE) MARKED THIS SIDE ONLY.
4. EPOXY, FOR CONTACT RETENTION, APPLIED TO CONTACT ROWS IN THIS AREA.
5. FINISH: PLATED GOLD .000050 THK PER MIL-G-45204 ON MATING END FOR A LENGTH OF .100 MIN, TAILS PLATED TIN-LEAD .000120 THK, ALL OVER NICKEL .000050 THK PER QQ-N-290.
6. HOUSING MAT'L: LIQUID CRYSTAL POLYMER, COLOR: GRAY
7. GASKET SHIPPED WITH 448286-2 ONLY, NOT ASSEMBLED.
8. 448286-1 NOT RELEASED FOR PRODUCTION.

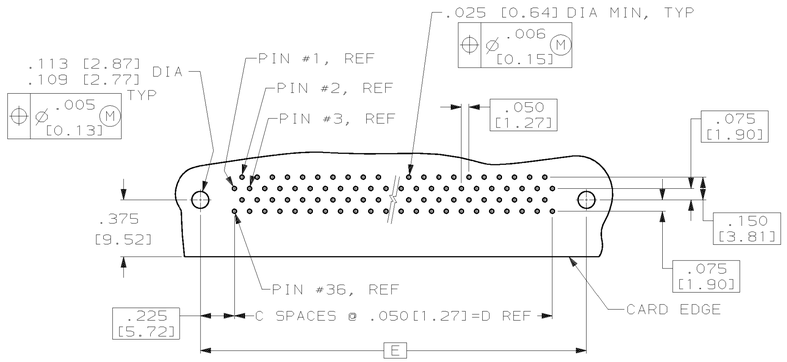

RECOMMENDED P.C. BOARD LAYOUT
(CONNECTOR SIDE)
SCALE: 2:1

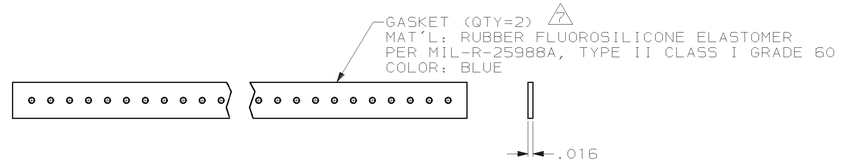

CAVITY I.D.	G DIM	F DIM	E DIM	D DIM	C	B DIM	A DIM	POSN	PART NUMBER
1 - 35	1.540 [39.12]	2.220 [56.93]	2.150 [54.61]	1.700 [43.18]	34	2.000 [50.80]	2.400 [60.96]	70	448286-2
8 1 - 35	1.540 [39.12]	2.220 [56.93]	2.150 [54.61]	1.700 [43.18]	34	2.000 [50.80]	2.400 [60.96]	70	448286-1

DO NOT SCALE PRINT.
UNLESS SPECIFIED
DIMENSIONS IN INCHES [mm]
TOLERANCES ON :
2 PLC DEC ± -
3 PLC DEC ± .005 [0.13]
ANGLES ± -

MATERIAL: SEE CALLOUTS

FINISH: SEE CALLOUTS

DR 2-1-93 T. ALEXANDER
CHK 2-2-93 D. GUTTER
APPD 2-2-93 D. GUTTER
APPD 2-2-93 T. ALEXANDER
PRODUCT SPEC -
APPLICATION SPEC -
WEIGHT -

AMP INCORPORATED
Harrisburg, Pa. 17105

NAME: PIN HEADER ASSEMBLY, MINI-BOX, RIGHT ANGLE

SIZE D | CAGE CODE 00779 | DRAWING NO 448286
SCALE 4:1 | SHEET 1 OF 1

CUSTOMER DRAWING